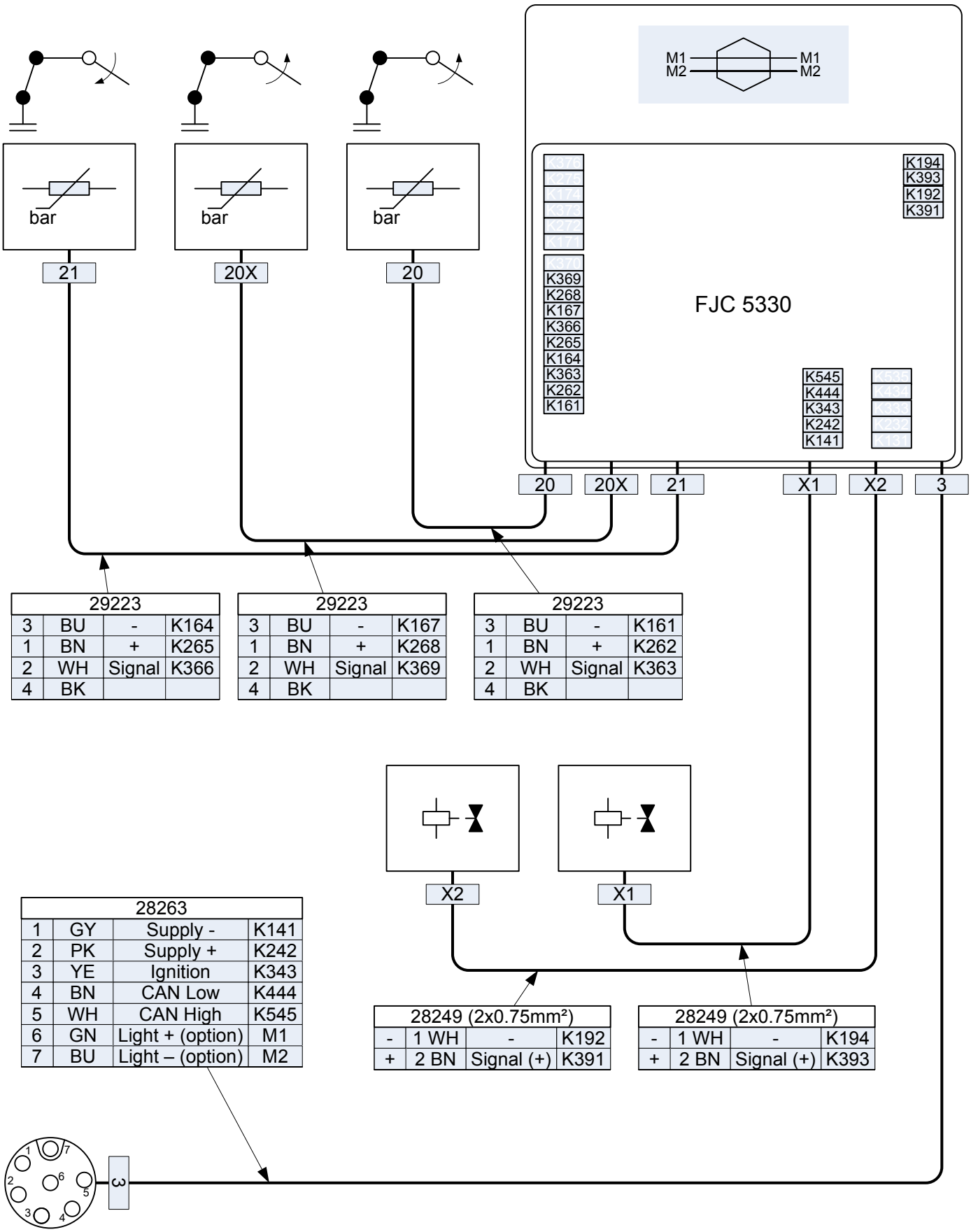

29223			
3	BU	-	K164
1	BN	+	K265
2	WH	Signal	K366
4	BK		

29223			
3	BU	-	K167
1	BN	+	K268
2	WH	Signal	K369
4	BK		

29223			
3	BU	-	K161
1	BN	+	K262
2	WH	Signal	K363
4	BK		

28263			
1	GY	Supply -	K141
2	PK	Supply +	K242
3	YE	Ignition	K343
4	BN	CAN Low	K444
5	WH	CAN High	K545
6	GN	Light + (option)	M1
7	BU	Light – (option)	M2

28249 (2x0.75mm²)			
-	1 WH	-	K192
+	2 BN	Signal (+)	K391

28249 (2x0.75mm²)			
-	1 WH	-	K194
+	2 BN	Signal (+)	K393

Revision		
Nr.	Date	Sign.
A	21.07.2009	BWK

Product: RCL 5300

Part: Fly-jib, 2 extra valves

Date: 21.07.2009

Sign.: BWK

Drawing size: A4

Replacing: 70 20 329

Drawing nr.: 70 21 103 01

Rep. by

Højbjerg Maskinfabrik as

Oddervej 200 - DK-8270 Højbjerg